RADEX®
LOFT

TEMIDA
213-453

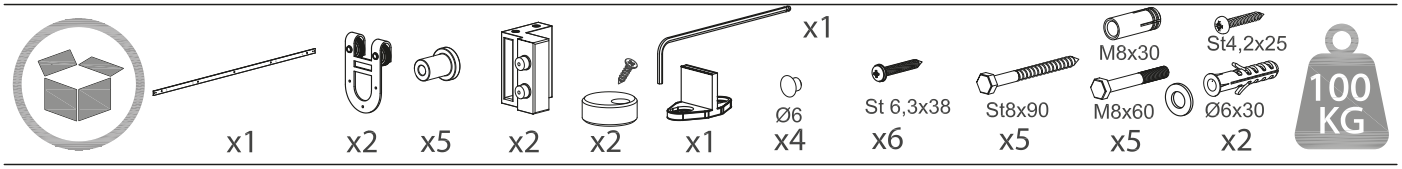

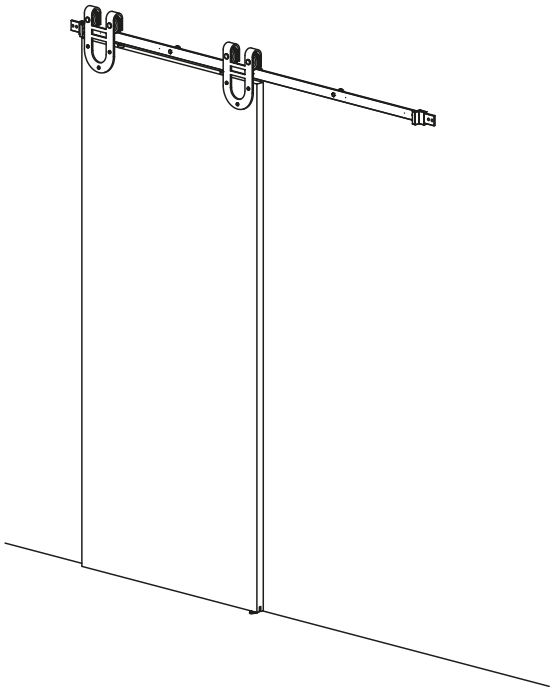

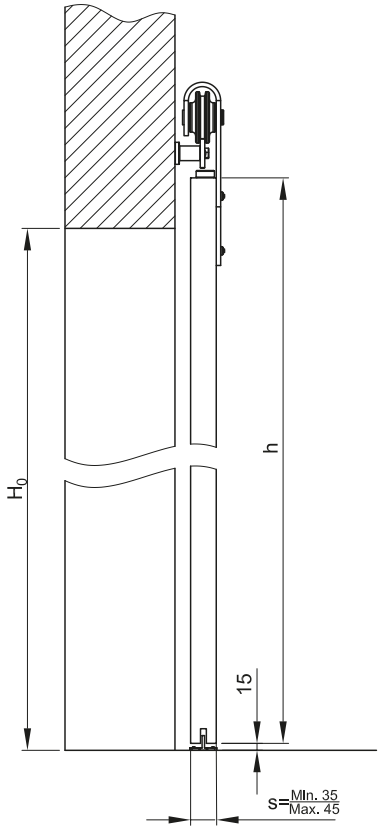

1

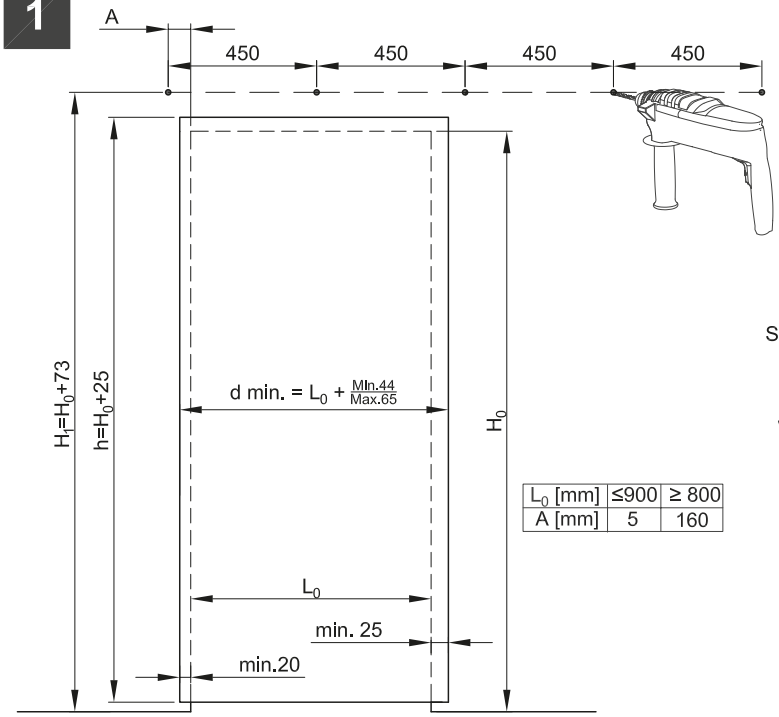

L_0 [mm]	≤900	≥ 800
A [mm]	5	160

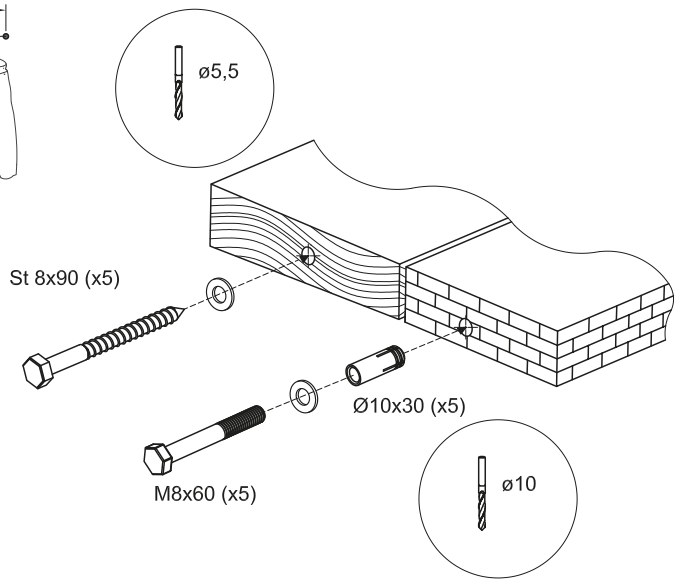

2

1. L_0 ≥800 mm

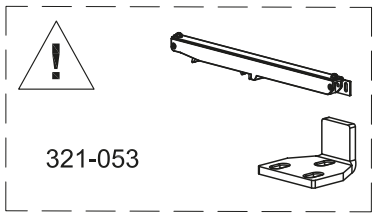

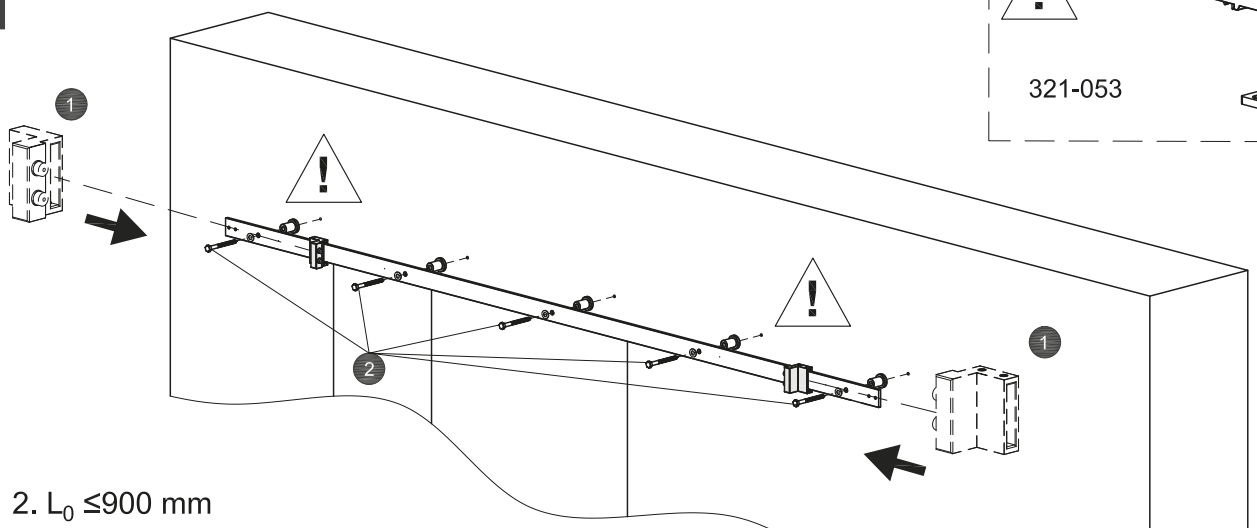

2. L_0 ≤900 mm

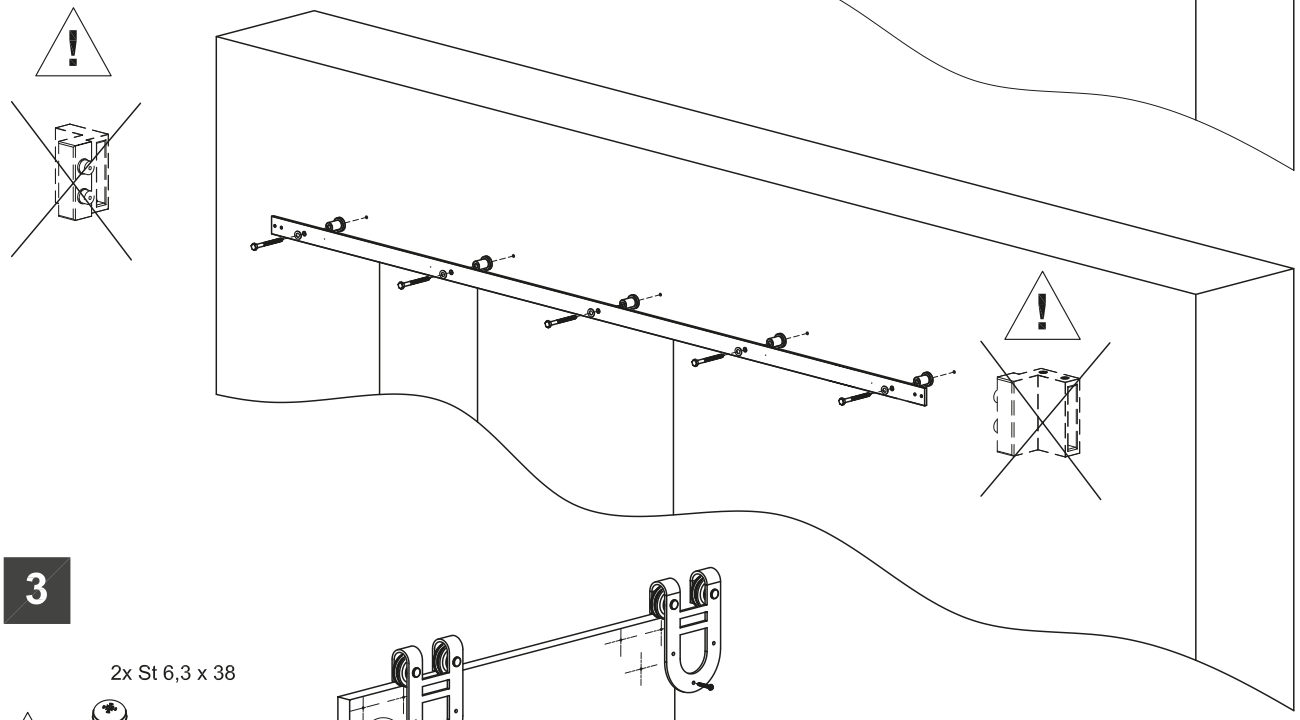

3

2x St 6,3 x 38

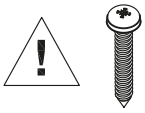

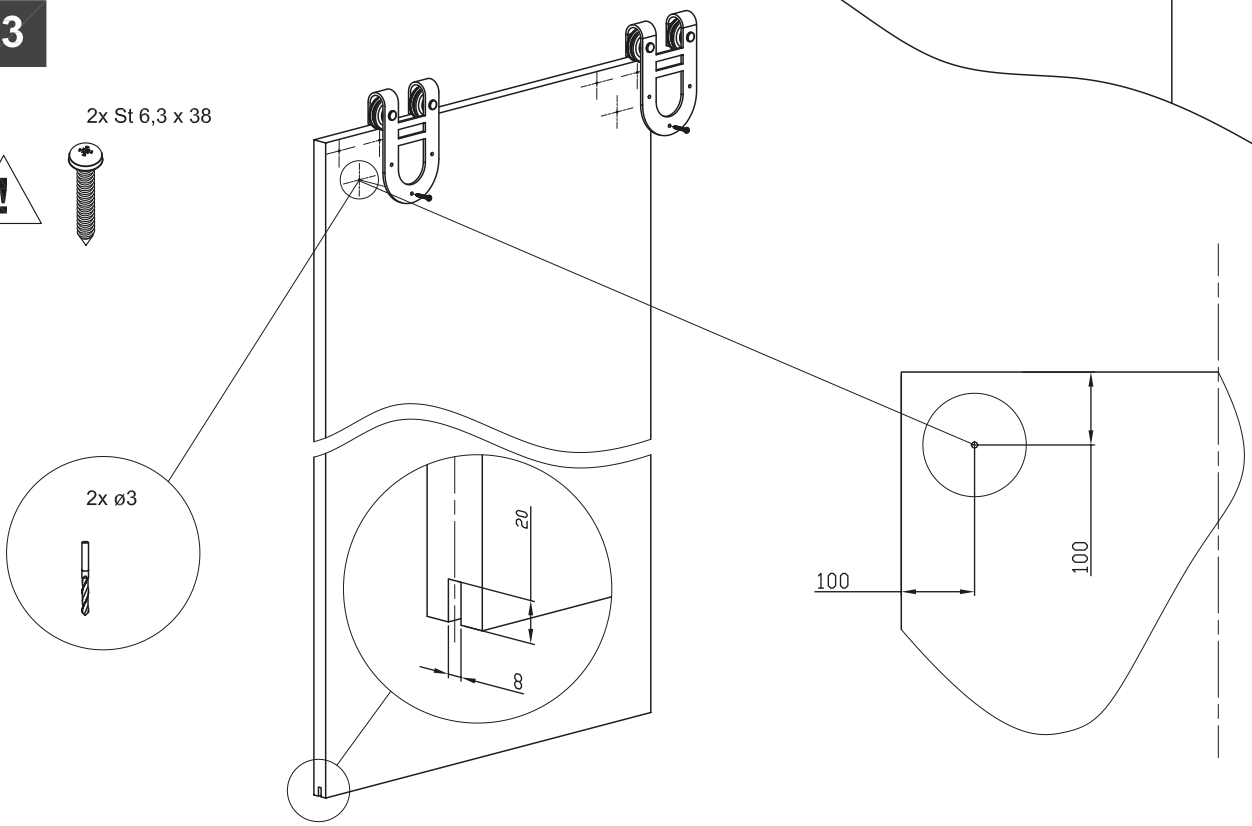

4

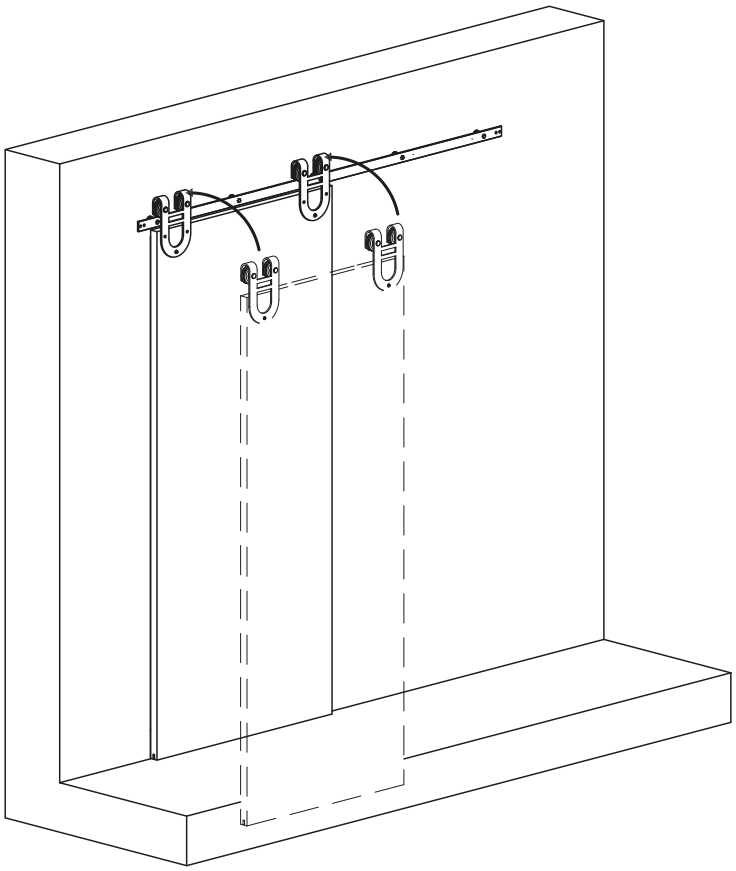

5

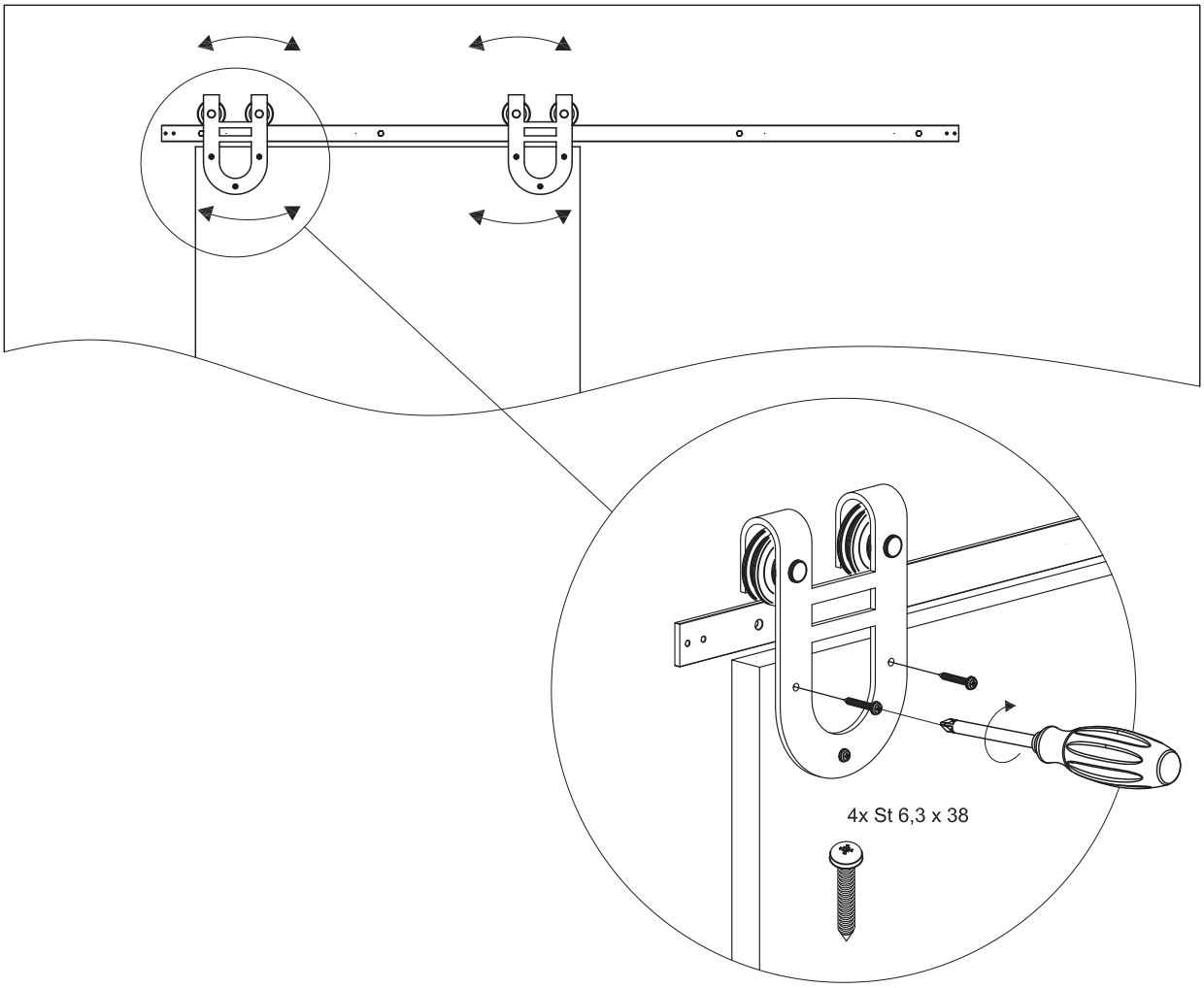

6

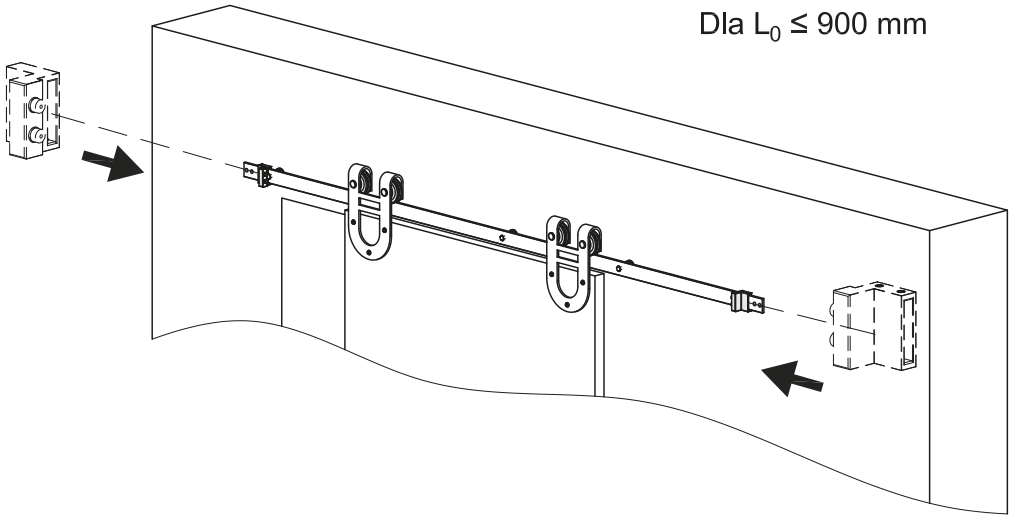

7

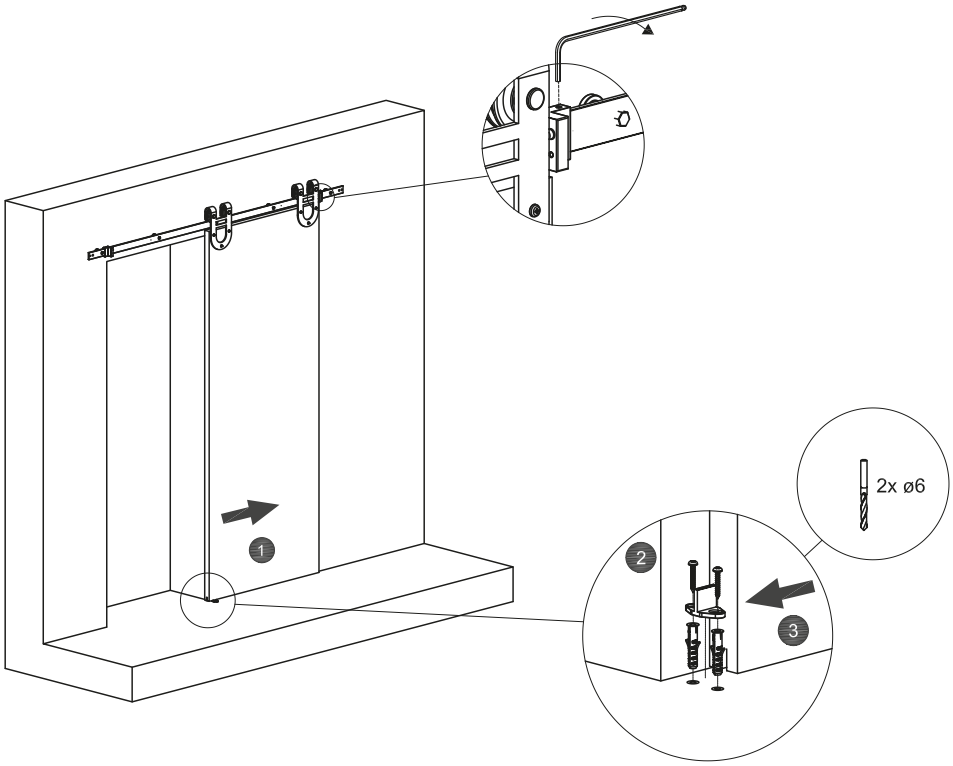

8

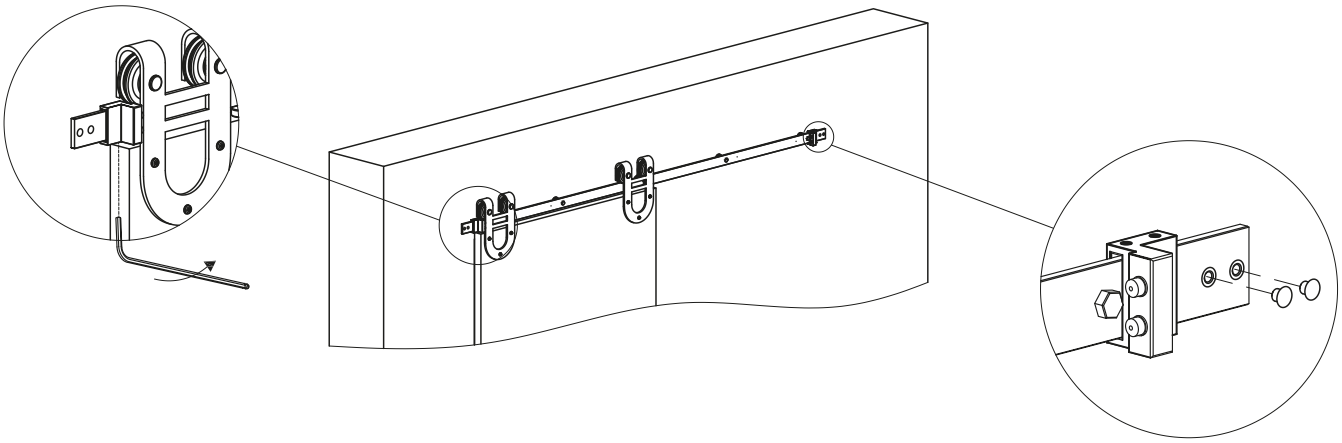

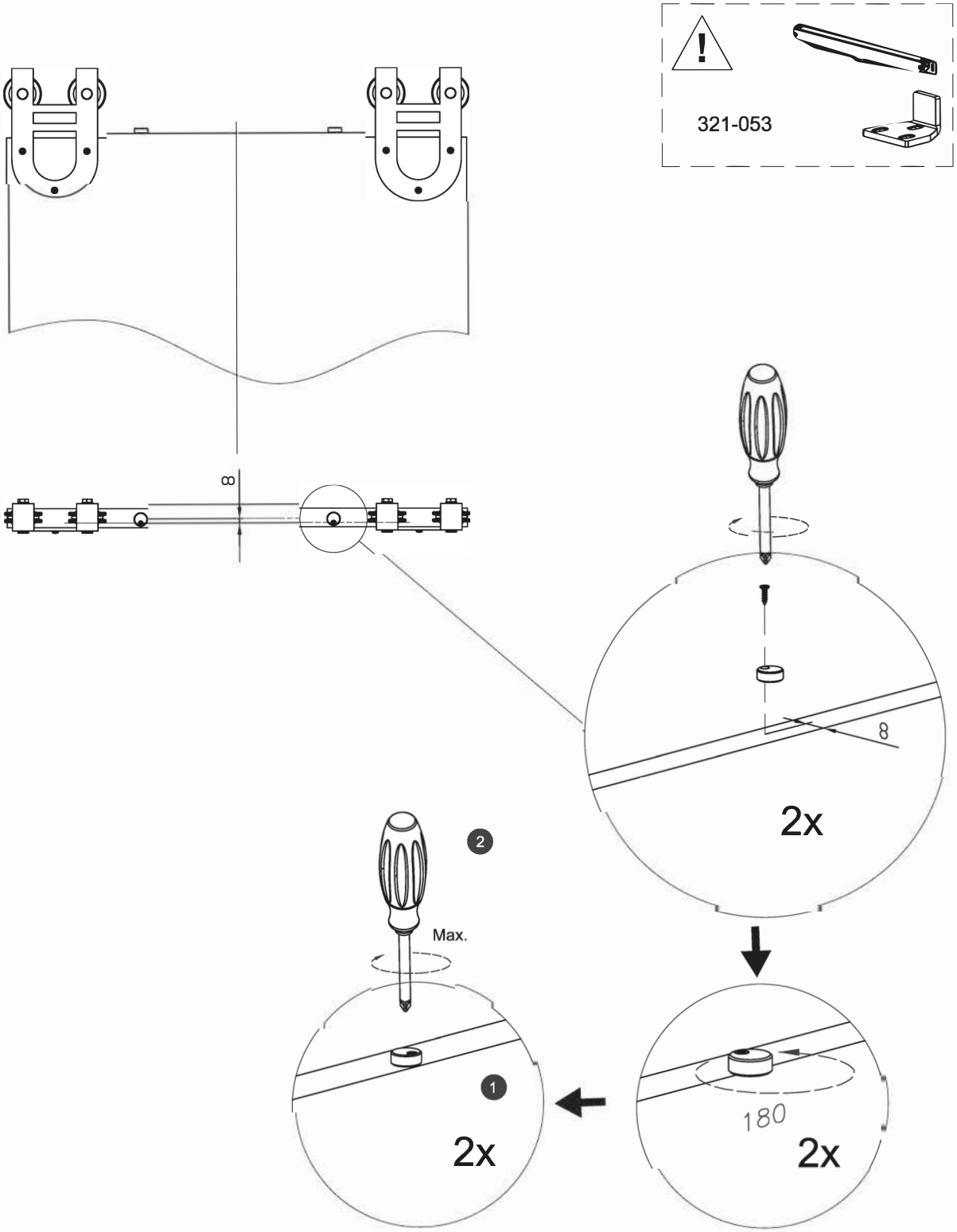
321-053
8
8
2x
2
Max.
1
2x
180
2x